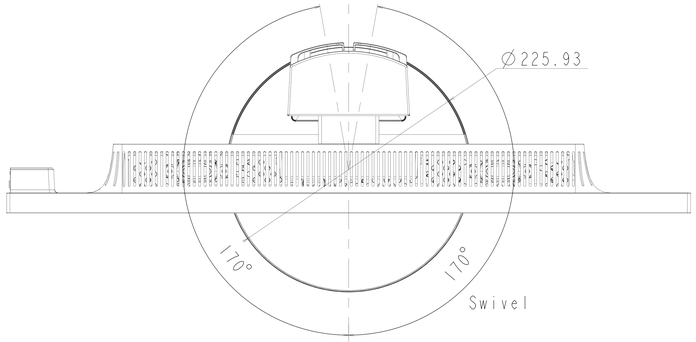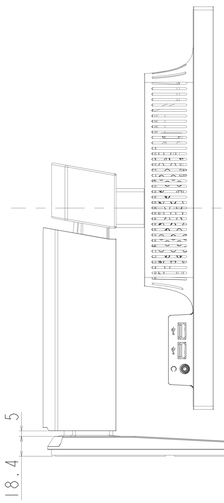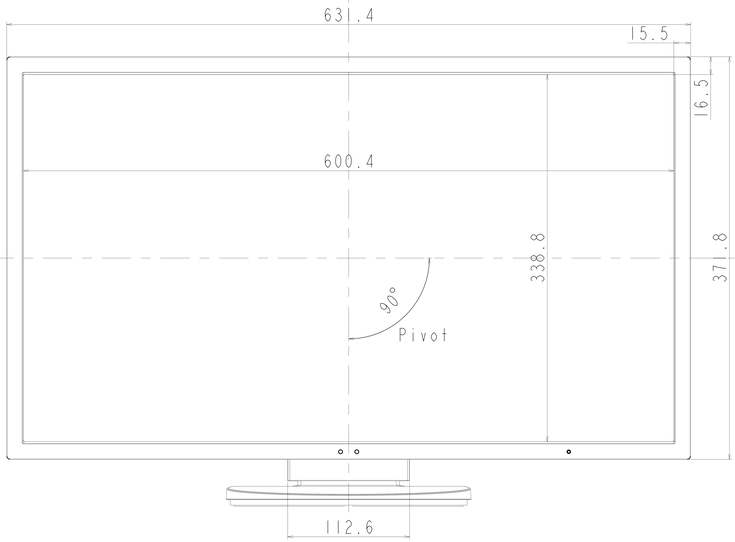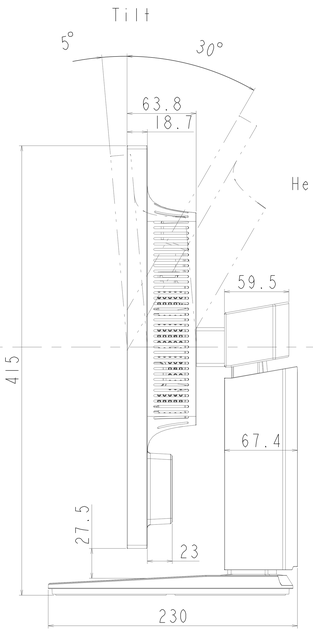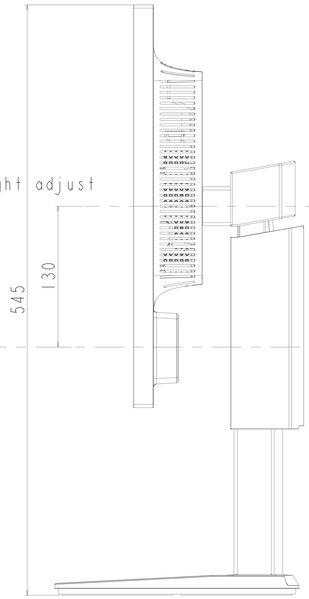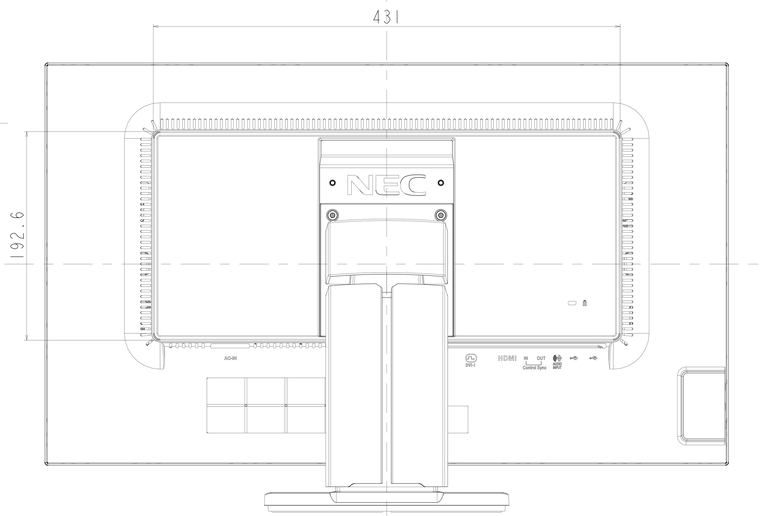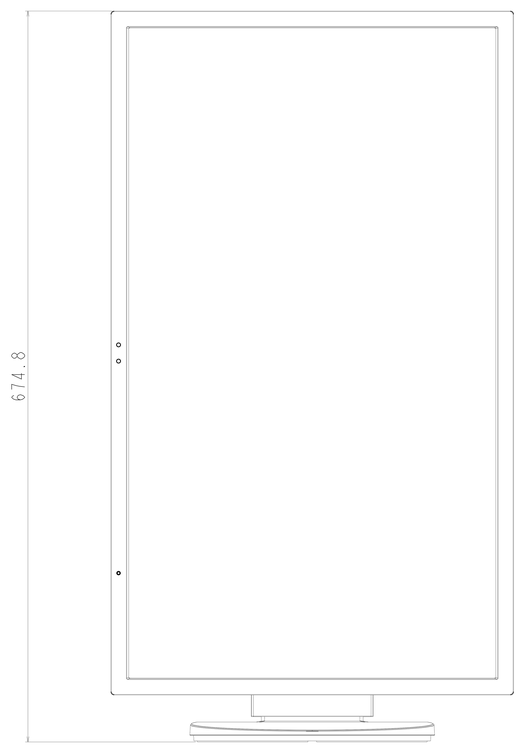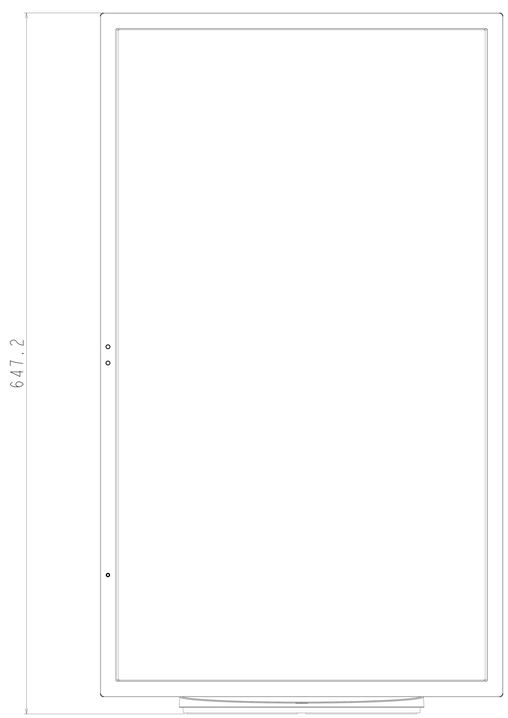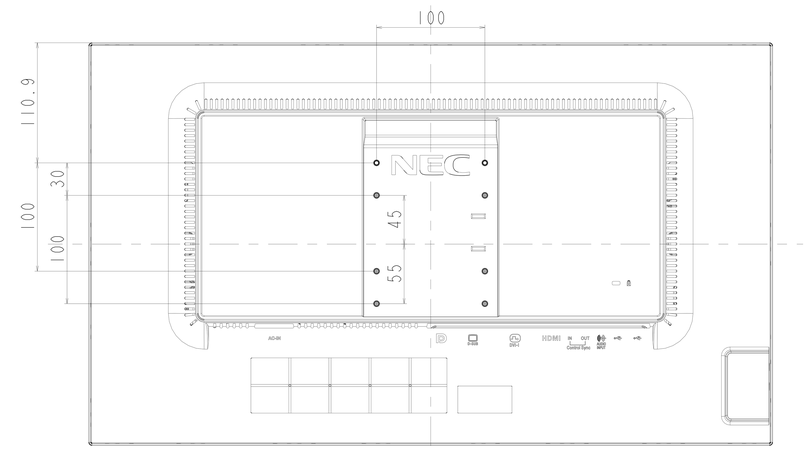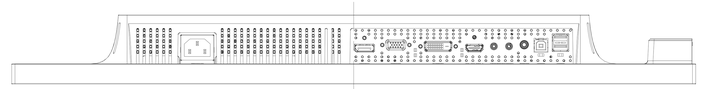EA273WM Outline